Biotelemetry XIII
March 26-31, 1995
Williamsburg, Virginia

RADIO TELEMETRIC EGG TO MEASURE TEMPERATURE, HUMIDITY, AND ORIENTATION IN THE NEST

George Stetten, Department of Biomedical Engineering, NSF/ERC,
Duke University, Durham, NC, 27706.
Fred Koontz, Charles Koontz, Christine Sheppard,
Wildlife Conservation Society, Bronx, NY, 10460.

ABSTRACT A radio telemetry device was built into an artificial egg to measure nest microclimate during the incubation of white-naped cranes (*Grus vipio*). Results from four trials suggest that throughout the 35-day incubation period (1) only the top of the egg remains at a fairly constant temperature, and a significant gradient exists across the egg which is lacking in standard moving-air incubators, (2) relative humidity remains between 30 and 50 percent, and (3) the eggs are turned about once per hour.

INTRODUCTION Artificial incubation of eggs is an important tool in the propagation of rare birds. This methodology is employed in cases of injury or death of the parents, inexperienced or unreliable parents, when hatching at different intervals leads to sibling strife, if for any other reason the eggs or young birds are at risk, or whenever multiple clutches are desired. The primary factors that must be simulated in an artificial environment for successful incubation are temperature, humidity and egg-turning rate. A biotelemetric study was undertaken at the Wildlife Conservation Park (Bronx Zoo) to measure these three variables within the nest microclimate of the endangered white-naped crane, *Grus vipio*.

Over the last 15 years, dozens of physiological studies have elicited details of eggshell design, how gas exchange takes place from embryo to atmosphere, and how egg weight and incubation parameters are related (e.g., Carey, 1983; Drent, 1975; Rahn, Ar, & Paganelli, 1979; Webb, 1987). Unfortunately, the variables most important to zoo biologists, the optimal temperature and humidity for incubation, cannot be predicted simply by analyzing an egg's structure. As a result, aviculturists have depended upon trial and error to determine artificial incubation settings. It would, of course, be more efficient to directly measure these variables within the nests of incubating birds. These data, however, are difficult to obtain because inserting probes into the nest often causes the birds to desert, and the data are usually flawed because the location of the measurements cannot be determined accurately. For these reasons, we turned to biotelemetry as a non-invasive approach. A mock egg was built (Stetten, Koontz, Sheppard, & Koontz, 1989; Stetten, Koontz, Sheppard, & Koontz, 1990; Koontz, 1991) that included sensors to measure nest temperature, humidity and egg orientation (to monitor egg-turning). During four trials, it was placed in the nest of an incubating white-naped crane pair for the duration of their 35-day incubation period.

White-naped cranes were selected for this project for two reasons. First, the Wildlife Conservation Society, together with the American Zoo and Aquarium Association, has made a commitment to the long-term propagation of white-naped cranes, an endangered species. By removing the eggs as they are laid, females can be enticed to produce up to 10 eggs (five clutches) per season. Thus, artificial incubation gives us the potential to rapidly increase the numbers of an entire species, or the offspring from a particular breeding pair. Hatchability rates of captive cranes range

between 50% and 70%, leaving room for improvement. The second reason for working with cranes is that they lay large eggs (about 200 gms), an advantage when cramming electronic components inside. We hope to refine the system so that ultimately it can be used for species with smaller eggs as well.

TELEMETRY SYSTEM A miniature radio transmitter operating at 164.33 MHz was built into a fiberglass egg, with circuitry for encoding data by means of pulse-position modulation (Howey, Board, & Kear, 1977). A series of 10 continuous wave (CW) pulses of 1 millisecond duration were transmitted in each data cycle, lasting approximately 40 seconds, after which the egg circuitry entered "sleep" mode for approximately 2 minutes. Transmitter power was approximately 15 milliwatts (see figure 1).

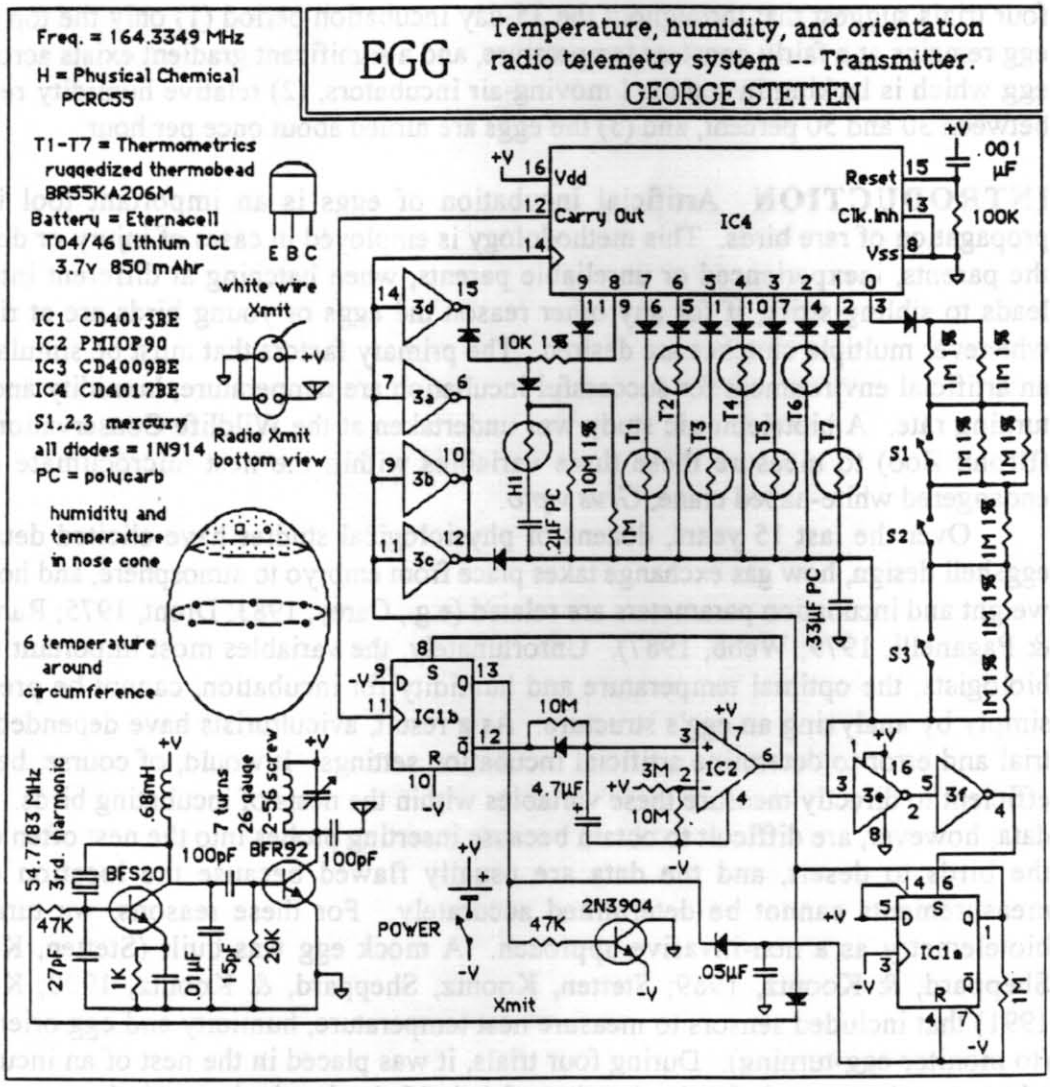

Figure 1. Schematic of radio telemetric egg.

Sensors in the telemetric egg included (1) a humidity sensor in the nose cone of the egg, (2) six thermistors distributed at 60° intervals around the egg's equator, and (3) three mercury switches in an equilateral triangle in the transverse plane of the egg to determine which of the six thermistors was on top (see figure 2). The humidity sensor

was a PCRC-55 humidity-sensitive resistor from Phys-Chemical Research Corporation. An extra thermistor was included in the nose cone to allow temperature compensation of humidity readings. All thermistors were Themometrics micro-miniature "ruggedized thermobeads," sealed in glass for long-term stability. The three mercury switches, in effect, formed the input to a digital-to-analog converter prodcuing a different voltage for each of the six possible orientations. Since eggs lie horizontally in the nest, motion with respect to gravity is limited to axial rotation around the long axis.

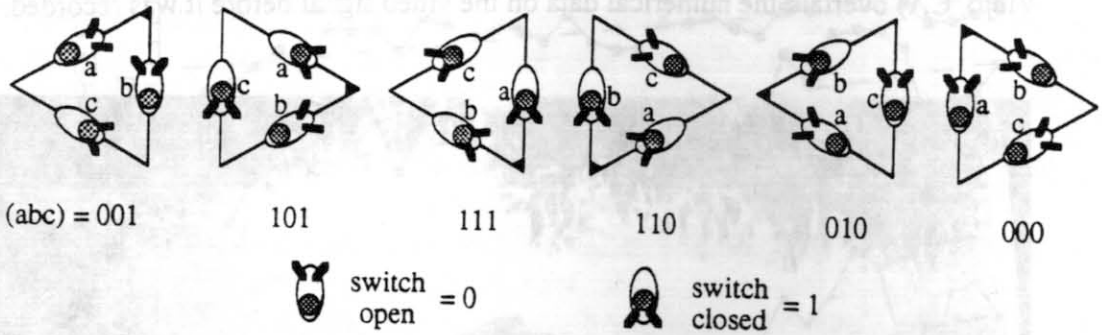

Figure 2. Three mercury switches, a, b, and c, were arranged in an equilateral triangle, such that a different 3-bit number (abc) resulted from each 60° increment of rotation, corresponding to a particular one of the six thermistors pointing upwards.

Pulse position modulation was chosen as the radio-frequency encoding scheme because of its inherent energy efficiency. The egg was powered by a single lithium thionyl-chloride cell (1/2 AA, 3.4 volts, 0.85 ampere-hour). One battery lasted for 3 months, much longer than the 35-day natural incubation period. The radio transmitter itself was a miniature device constructed with surface mount technology by Mr. John Kenty of Syracuse, NY, operating at 164.335 MHz through a bent whip antenna inside the egg with a loading coil at its midpoint. The radio signals were received by a Yagi antenna located 5 meters from the nest, at a height of 3 meters above the ground.

Readings were transmitted and recorded at 2-3 minute intervals over the complete incubation period, along with ambient temperature and humidity data from a weather probe (Rotronic, Inc). An inexpensive radio receiver (Radio Shack PRO-38) was adapted to detect the CW pulses, and preprocessing of detected pulses was performed by a Hitachi 64180 microprocessor with crystal-controlled timers for decoding the pulse position modulation. Finally, data collection was accomplished on an IBM-compatible computer which stored time-stamped data on diskette, as well as overlaying it on video images from a television camera monitoring the nest.

The egg was calibrated in a computer-controlled environmental chamber against the Rotronic weather probe. The probe itself was calibrated against a mercury thermometer (second generation National Bureau of Standards, accurate to 0.1°C), and a set of standard salt solutions for humidity determination. A conservative estimate for the accuracy of the data from the egg is 10% RH and 1.0°C, although the precision of the system was 10 to 100 times greater. Within the limits of its precision, the system was virtually noise-free in the short term, producing repeatable numbers in a constant environment. Drift and hysteresis were more of a problem with humidity than

temperature, probably because of chemical contamination and moisture on the sensor surface.

VIDEO ANALYSIS A video camera was installed in the yard so that the birds could be monitored while nesting. The commercial video system was a Type II FieldCam (Fuhrman Diversified, Inc., La Porte, Tex.), capable of detecting visible and infrared light, connected to a video time lapse recorder (AG-6720, Panasonic Secaucus, NJ.). An array of 18 LEDs placed 3 meters from the nest illuminated the birds at night. Thus we obtained continuous visual data on which crane, male or female, was incubating the radio egg. A video/serial interface (VSI Unit, American video Equipment, Mission Viejo, CA) overlaid the numerical data on the video signal before it was recorded.

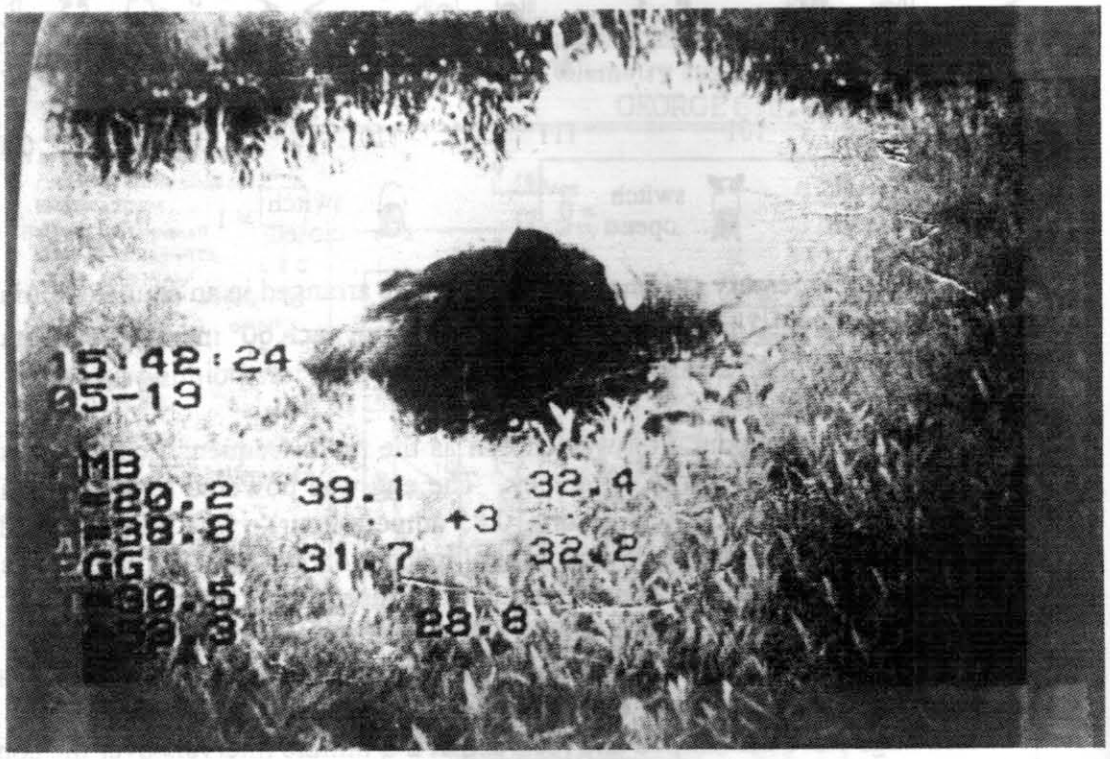

Figure 3. Photograph of video screen with data overlay. Numbers arranged in a circle represent temperatures around the egg with actual positions shown, i.e. top thermistor on top. The number within the circle (next to the arrow) identifies top thermister.

THE BIRDS Three different bonded pairs of white-naped cranes were used to incubate the radio egg during four separate incubation periods. The cranes lived in an outside pen that measured 18 by 20 meters, surrounded by a 2.5-meter-high chain-link fence. The yard had a substrate of grass, numerous bushes and trees, and a small stream. One bird of each pair was marked with black dye on its white nape, so that it could be individually identified on video tape. Crane husbandry at the Wildlife Conservation Park (Sheppard & Dolensek, 1986), and white-naped crane biology (Johnsgard, 1983) are reviewed elsewhere.

RESULTS Temperature data revealed an unexpectedly large thermal gradient between the top and bottom of the egg (figure 4). The gradient did shrink somewhat, from about 10°C to about 8°C, as the spring season progressed and the ground temperature became relatively warmer. On any given day, results from the incubating male and female were almost identical.

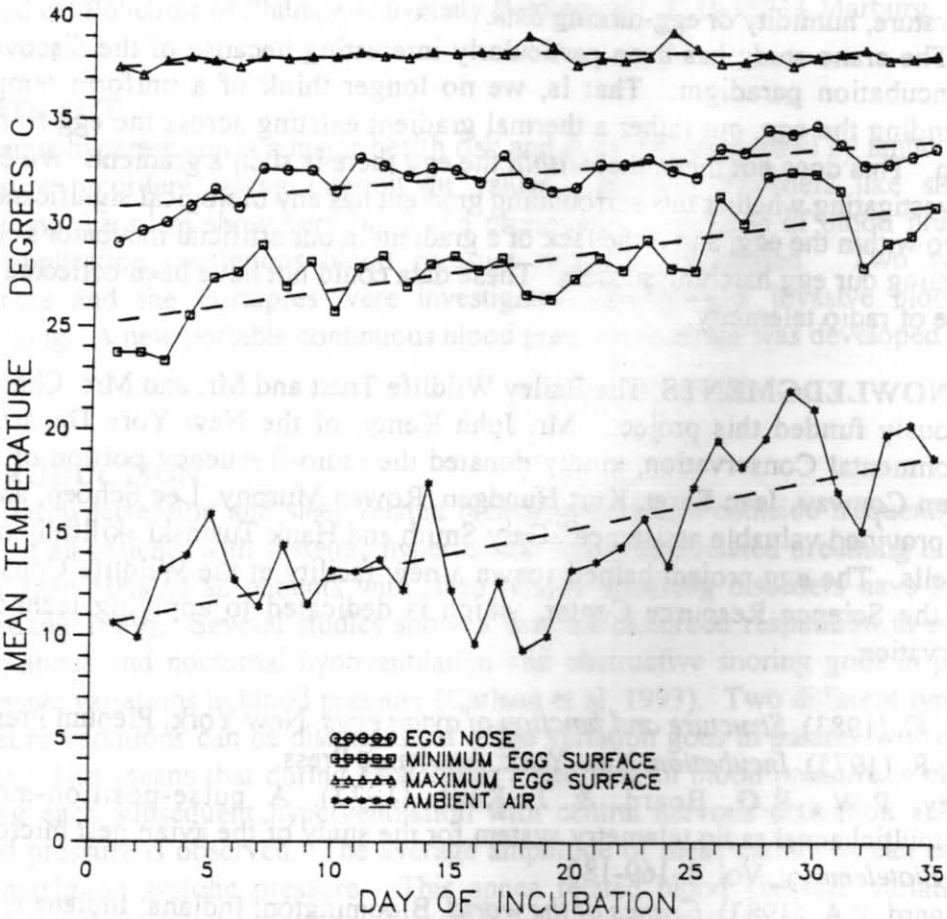

Figure 4. Temperature vs. day of incubation for one trial.

In general, the egg's climate remained between 30 and 50 percent RH, and proved to be closely related to the ambient air humidity, as recorded by the nearby Rotronic weather probe. The *nest* humidity seemed to be simply a function of warming the nearby *ambient* air humidity to the nest temperature. Remember that warm air holds more moisture, and consequently the relative humidity falls when the cooler environmental air is warmed to nest temperature. The birds do not seem to add significant moisture or remove it from the nest microclimate. On average, the eggs were turned about once per hour. Each hourly bout of turning, however, actually consisted of a bird moving the egg several times within a 1- or 2-minute period.

By collecting a complete video record of nesting behavior, a number of behavioral analyses were possible. For example, comparisons between the incubation-sharing duties of males and females revealed that females spent more time incubating than males. An examination of incubation intervals for one pair showed that the male spent an average 62 minutes on the nest at a time, whereas the female spent 102 minutes. In

addition, by grouping data into night and day, we found that intervals for both males and females were much longer at night compared to the day. For the male, the incubation interval was 41 minutes during the *day*, but increased to 108 minutes during the *night*. These types of exploratory analyses were easy to perform because the behavioral data were maintained in a computer database. It was especially useful that the video-based behavior data could be overlaid temporally onto any of the temperature, humidity or egg-turning data.

The crane study has been particularly interesting because of the discovery of a new incubation paradigm. That is, we no longer think of a uniform temperature surrounding the egg, but rather a thermal gradient existing across the egg from top to bottom. This does not mean that *within* the egg there is such a gradient. We currently are investigating whether this surrounding gradient has any biological significance to the embryo within the egg, and if the lack of a gradient in our artificial incubator's climate is decreasing our egg hatching success. These data could not have been collected without the use of radio telemetry.

ACKNOWLEDGMENTS The Bailey Wildlife Trust and Mr. and Mrs. Charles Fritz generously funded this project. Mr. John Kenty, of the New York Department of Environmental Conservation, kindly donated the radio-frequency portion of the egg. William Conway, Jean Ehret, Kurt Hundgen, Rowan Murphy, Lee Schoen, and Susan Elbin provided valuable assistance. Gary Smith and Hank Tusinski skillfully made the eggshells. The egg project helped spawn a new facility at the Wildlife Conservation Park, the Science Resource Center, which is dedicated to applying technology to conservation.

Carey, C. (1983). *Structure and function of avian eggs*. New York: Plenum Press.

Drent, R. (1975). *Incubation*. New York: Academic Press.

Howey, P.W., R.G. Board, & J. Kear, (1977). A pulse-position-modulated multichannel radio telemetry system for the study of the avian nest microclimate. *Biotelemetry*, Vol. 4, 169-180.

Johnsgard, P.A. (1983). *Cranes of the world*. Bloomington, Indiana: Indiana University Press.

Koontz, F.W. (1991). Integrating biotelemetric, computer and video technologies to monitor physiological temperatures of zoo birds and reptiles. C. S. Asa (Ed.), *Biotelemetry Applications for Captive Animal Care and Research*. pp. 7-18, Wheeling, WV: American Zoo and Aquarium Association.

Rahn, H., A. Ar, & Paganelli, C. V. (1979). How bird eggs breathe. *Scientific American*, February, 208-217.

Sheppard, C., & E.P. Dolensek, (1986). The management of diseases of gruiformes. *Annual Proceedings of the American Association of Zoological Veterinarians*.

Stetten, G., F. Koontz, C. Sheppard, & C. Koontz (1989). Biotelemetric monitoring of white-naped crane (*Grus vipio*) nest microclimate in captivity. *Proc. Amer. Assoc. Zool. Parks Aquar:* 264-271.

Stetten, G., F. Koontz, C. Sheppard, & C. Koontz (1990). Telemetric egg for monitoring nest microclimate of endangered birds. *Proceedings of the International Telemetering Conference, Instrument Society of America*.

Webb, D. R. (1987). Thermal tolerance of avian embryos: a review. *The Condor*, Vol. 89, 874-898.